적 용 규 격
SPECIFICATION APPLIED

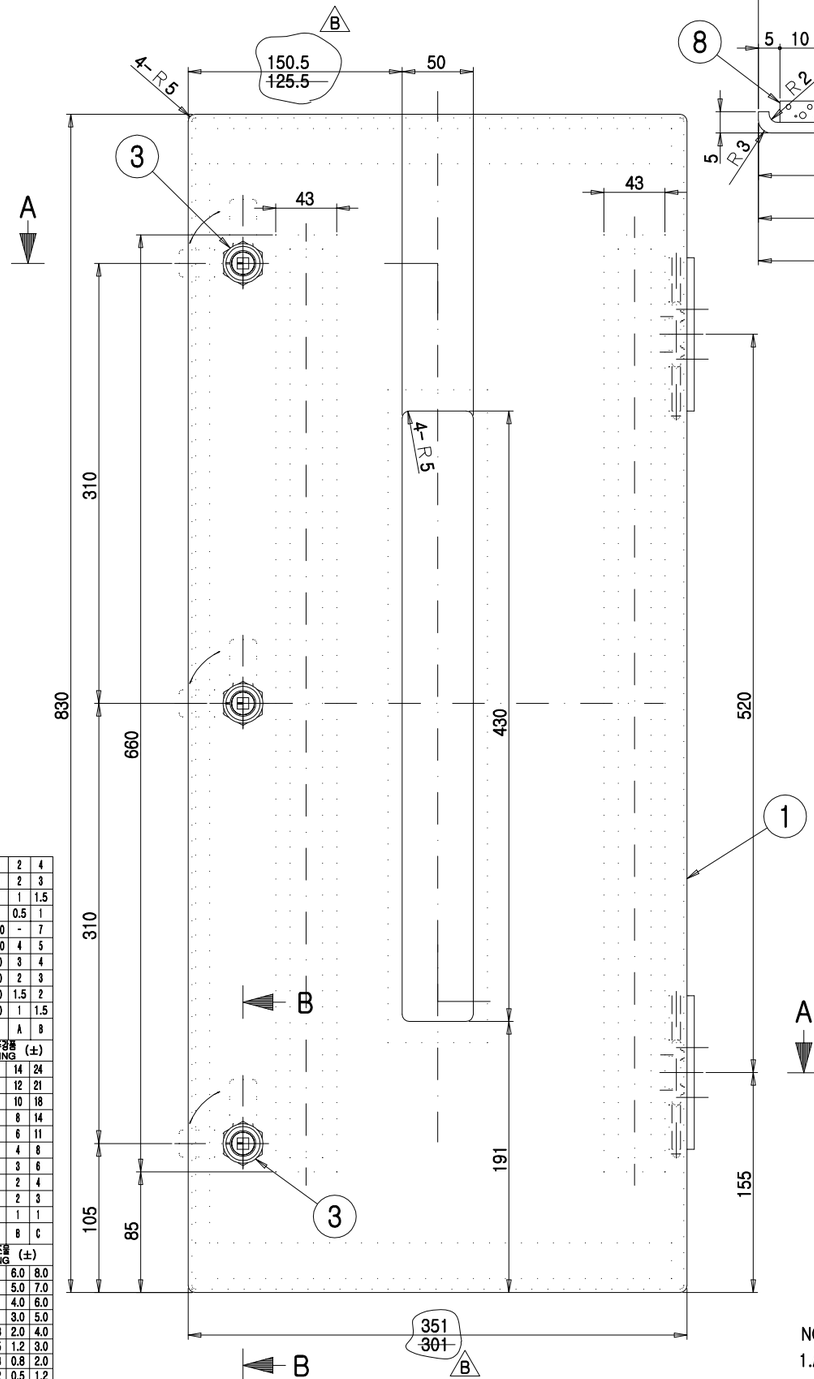

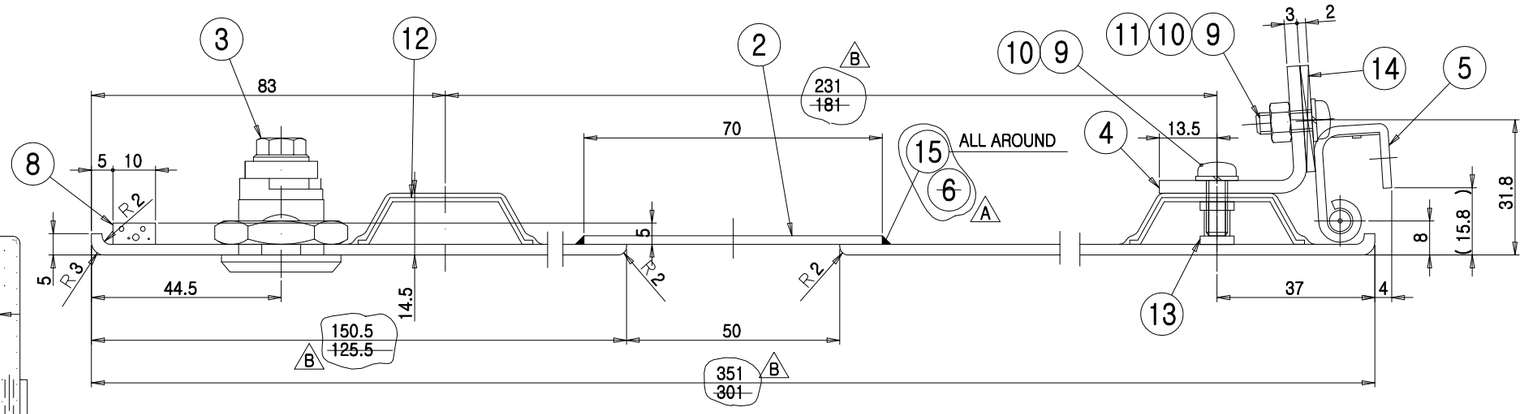

SECTION A-A
SCALE=1/1

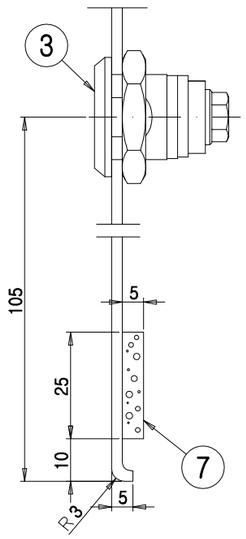

SECTION B-B
SCALE=1/1

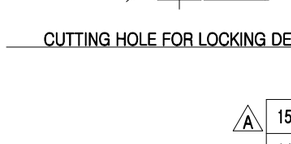

CUTTING HOLE FOR LOCKING DEVICE

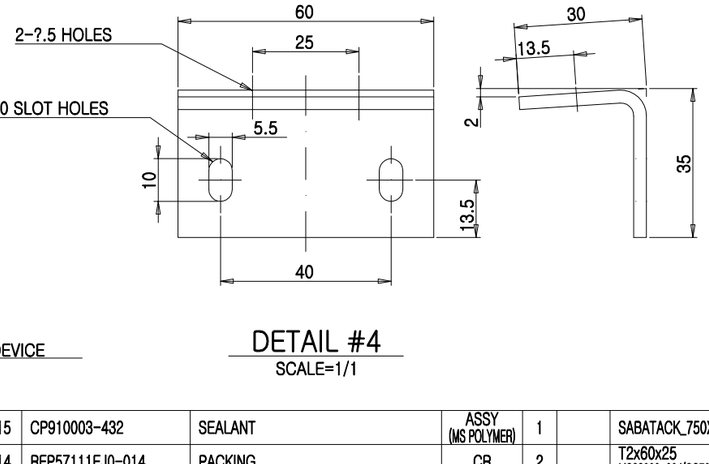

DETAIL #4
SCALE=1/1

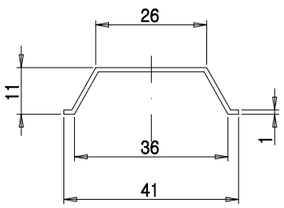

DETAIL #12
SCALE=1/1

NOTE
1. AN INTERIOR PANEL'S COLOR AND SURFACE SHALL BE MANUFACTURED AFTER SAMPLE'S APPROVAL BY CUSTOMER

기호 MARK	일자 DATE	변경내역 DETAIL OF REVISION(E.C ZONE)	설변번호 E.C NO.	설계 DGN	검도 CHK	승인 APP
Bx7	2016.08.11	CORRECTED DIM ACCORDING TO REQUEST OF TVS	RSD1402-U203	H.U.LEE	S.B.LEE	H.G.RYU
Ax3	2015.04.02	CHANGED PART NO. #6 -> #15	RSD1402-U101	H.U.LEE	J.W.BAE	H.G.RYU

재질 MATERIAL	두께 THICKNESS	~ 40	2	4
		~ 80	2	3
		~ 10	1	1.5
		< 3	0.5	1
	길이 LENGTH	~ 3150	-	7
		~ 1600	4	5
		~ 800	3	4
		~ 400	2	3
		~ 200	1.5	2
		~ 100	1	1.5
등급 GRADE			A	B
주물, 주강품 CASTING (±)				
~ 20M		8	14	24
~ 15M		7	12	21
~ 12M		6	10	18
~ 8M		5	8	14
~ 4M		4	6	11
~ 2M		3	4	8
~ 1M		2	3	6
~ 315		1	2	4
~ 120		1	2	3
~ 30		1	1	1
등급 GRADE			A	B	C
용접 구조물 WELDING (±)				
~ 20M		-	6.0	8.0
~ 15M		-	5.0	7.0
~ 12M		-	4.0	6.0
~ 8M		-	3.0	5.0
~ 4M		0.8	2.0	4.0
~ 2M		0.5	1.2	3.0
~ 1M		0.3	0.8	2.0
~ 315		0.2	0.5	1.2
~ 120		0.15	0.3	0.8
~ 30		0.1	0.2	0.5
3 ~ 6		0.05	0.1	0.2
등급 GRADE			A	B	C
기계 가공품 MACHINING (±)				
규정치없은 일반공차표 GENERAL TOLERANCE				

	NO.	부품 번호 PART NO.	품명 DESCRIPTION	재질 MATERIAL	수량 QTY	중량 W.T	비고 REMARKS
A	15	CP910003-432	SEALANT	ASSY (MS POLYMER)	1		SABATACK_750XL,GRAY
	14	RFP57111EJ0-014	PACKING	CR	2		T2x60x25 MS39000-004(SC70-F3(CR))
	13	RFP57111EJ0-013	NUTSERT	SUS304	4		M5
	12	RFP57111EJ0-012	STIFFNER	A6063S	2		T1
	11	RS60401-006S	NUT,HEX	SUS304	4		M5
	10	RS60801-005S	WASHER,SPRING	SUS304	6		M5
	9	RS60606-148S	SCREW,P.H	SUS304	6		M5x16
	8	RFP57111EJ0-008	PACKING	EPDM	1		T5x10x760 MS39000-017(R70-F3(EPDM))
B	7	RFP57111EJ0-007A	PACKING	EPDM	2		T5x25x330~~270~~ MS39000-017(R70-F3(EPDM))
A	~~6~~	~~CP910003-445~~		~~POLYURETHANE~~	~~1~~		~~SIKAFLEX_221~~
	5	RFP50018AN0	HINGE,ASSY	ASSY	2		
	4	RFP57111EJ0-004	BRACKET	SUS304	2		T3
	3	RFP55028AN0-301	DEVICE,LOCKING	ASSY	3		
	2	RFP57111EJ0-002	COVER	PC	1		T2x460x70(CLEAR)
B	1	RFP57111EJ0-001A	PANEL	FRP	1		T2.5

승인 APP	HyunGyu Ryu 2015.02.09
검도 CHK	JinWook Bae 2015.02.09
설계 DGN	HeonUk Lee 2015.02.09
제도 DRG	HeeSook Jeong 2015.02.09

재질 MAT'L ASSY
총중량 G. W
일반공차 MC B WD CT
SIZE A2
참고번호 REF. NO.

명칭 TITLE: PANEL,INSPECTION
도면 번호 DRG. NO: RFP57111EJ0 MS
Ver. 00 Rev. -B
SCALE 1/3
매수 SHEET 1 of 1

HYUNDAI Rotem 현대로템주식회사

RSD1402
RFP-
년-PRJT
정리번호

본 도면은 당사 재산으로서 허가없이 무단복사/배포 금지함. PROPERTY OF ISSUING ENTITY. CANNOT BE DISTRIBUTED OR REPRODUCED WITHOUT AUTHORIZATION.

CATIA